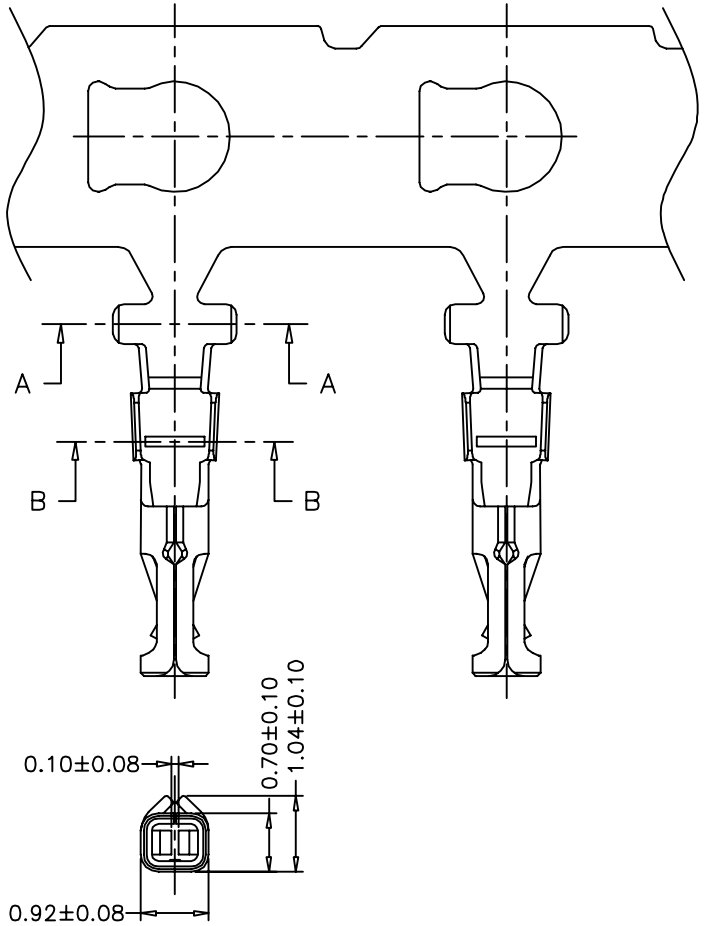


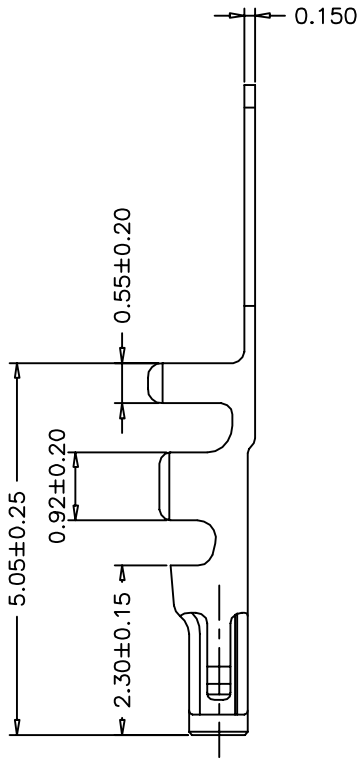


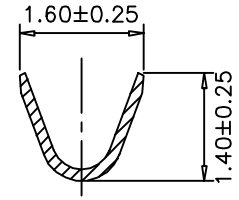


SEC:A–A

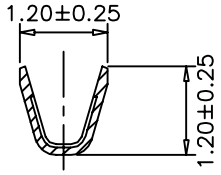


SEC:B–B

Ordering Information & Specifications

| Part No | Wire Range | Insulation O.D. | Material | Finish | Qty/reel |
|---|---|---|---|---|---|
| SCT1255–GPE | AWG#28–#32 | 0.90mm(max) | Phosphor Bronze | Gold–plated | 15,000pcs |
| SCT1255–TPE | AWG#28–#32 | 0.90mm(max) | Phosphor Bronze | Tin–plated | 15,000pcs |

| REV | DATE | MODIFICATION DESCRIPTION | CHANGE | APPROVE |
|---|---|---|---|---|
| 0 | 05/12/27 | NEW | | |

| OPERATION | |
|---|---|
| ~ 10 | ±0.15 |
| 20 ~ 30 | ±0.30 |
| 30 ~ | ±0.50 |
| Angle | ± 2° |
| DIM | TOL |

DRAW
DESIGN
CHECK
APPROVE

SCALE
UNIT mm
SIZE A4
SHEET 1/1
PROJ.

SCONDAR 森康达电子有限公司
SCONDAR ELECTRONIC LIMITED

PART NO. SCT1255T/1256T
TITLE: JAE1.25(FI–S) TER
DRAWING NO. SCT1255T/1256T