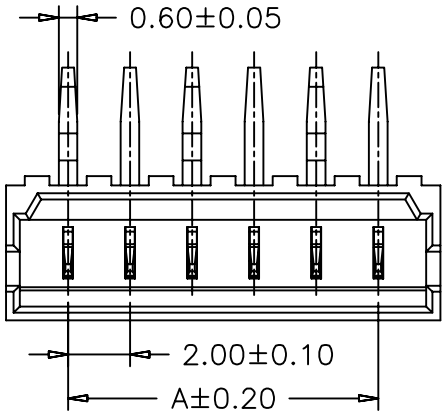

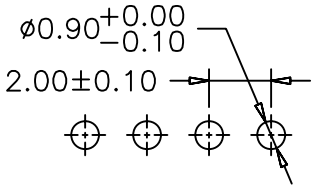

PCB LAYOUT

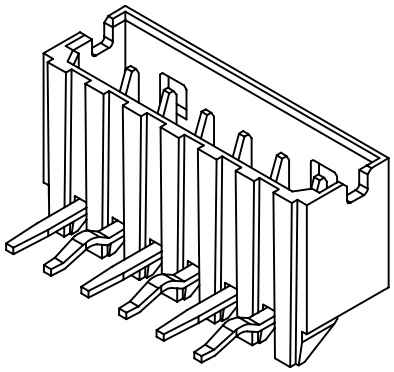

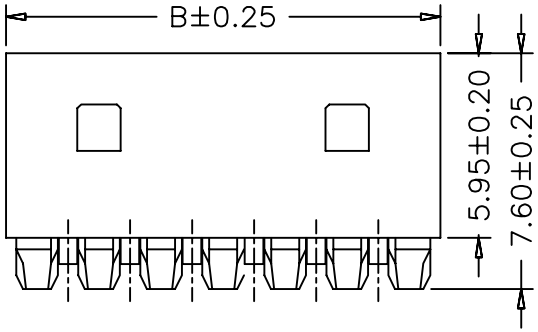

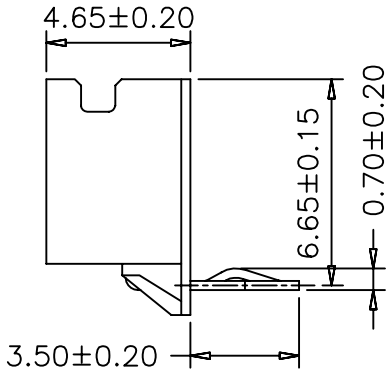

SPECIFICATIONS

Voltage Rating: 125V AC/DC
Current Rating: 2A AC/DC
Withstanding Voltage: 800V AC/minute
Insulation Resistance: 1,000MΩ min.
Temperature Range: -25° C - +85° C
Contact Resistance: 20mΩ max

WAFER

Part No: SCT2002WR-XXP
Poles: 2-15
Material: Nylon 66, UL94V-0
Pin: Brass, Tin plated

PART NO.	Dimensions	
	A	B
SCT2002WR-2P	2.00	6.00
SCT2002WR-3P	4.00	8.00
SCT2002WR-4P	6.00	10.00
SCT2002WR-5P	8.00	12.00
SCT2002WR-6P	10.00	14.00
SCT2002WR-7P	12.00	16.00
SCT2002WR-8P	14.00	18.00
SCT2002WR-9P	16.00	20.00
SCT2002WR-10P	18.00	22.00
SCT2002WR-11P	20.00	24.00
SCT2002WR-12P	22.00	26.00
SCT2002WR-13P	24.00	28.00
SCT2002WR-14P	26.00	30.00
SCT2002WR-15P	28.00	32.00

REV	DATE	MODIFICATION DESCRIPTION	CHANGE	APPROVE
0	05/12/27	NEW		

OPERATION	
~ 10	±0.15
20 ~ 30	±0.30
30 ~	±0.50
Angle	± 2°
DIM	TOL

DRAW	Judy.Huang	2006/05/02
DESIGN		
CHECK	Micky.Liu	2006/05/02
APPROVE	Hellen.Li	2006/05/02

SCALE	
UNIT	mm
SIZE	A4
SHEET	1/1
PROJ.	

SCONDAR 森康达电子有限公司 SCONDAR ELECTRONIC LIMITED

PART NO.	SCT2002WR-XXP
TITLE:	MX2.0 90C WAFER
DRAWING NO.	SCT2002WR