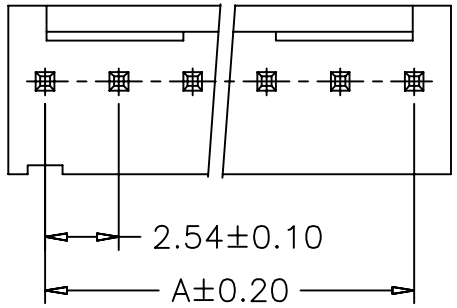

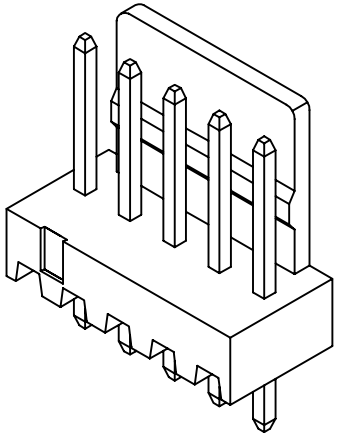

WAFER
Part No: SCT2541WV-XXP
Poles: 2-20
Material: Nylon 66, UL94V-2
Pin: Brass, Tin plated

SPECIFICATIONS
Voltage Rating: 250V AC/DC
Current Rating: 4A AC/DC
Withstanding Voltage: 1000V AC/minute
Insulation Resistance: 1000MΩ min.
Temperature Range: -25° C - +85° C
Contact Resistance: 20mΩ max

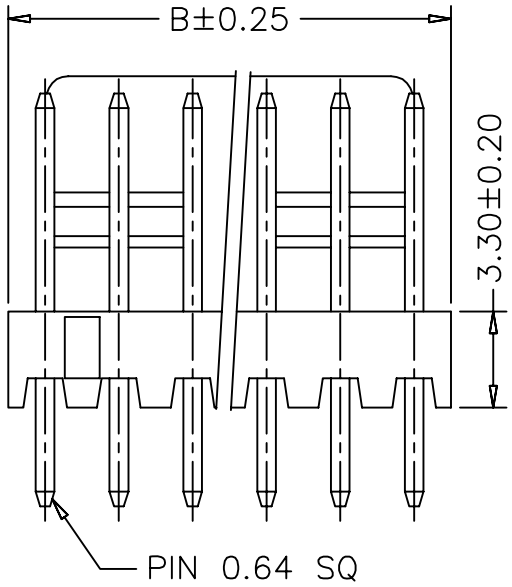

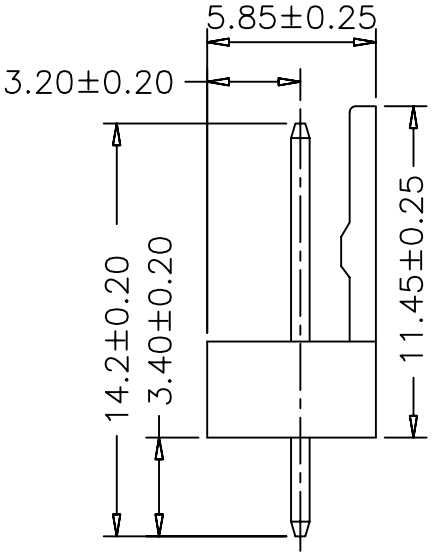

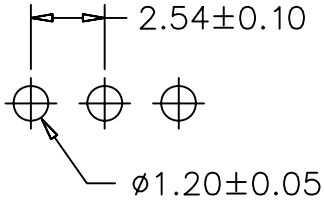

P.C.B LAYOUT

PART NO.	Dimensions	
	A	B
SCT2541WV-02P	2.54	5.08
SCT2541WV-03P	5.08	7.62
SCT2541WV-04P	7.62	10.16
SCT2541WV-05P	10.16	12.70
SCT2541WV-06P	12.70	15.24
SCT2541WV-07P	15.24	17.78
SCT2541WV-08P	17.78	20.32
SCT2541WV-09P	20.32	22.86
SCT2541WV-10P	22.86	25.40
SCT2541WV-11P	25.40	27.94
SCT2541WV-12P	27.94	30.48
SCT2541WV-13P	30.48	33.02
SCT2541WV-14P	33.02	35.56
SCT2541WV-15P	35.56	38.10
SCT2541WV-16P	38.10	40.64
SCT2541WV-17P	40.64	43.18
SCT2541WV-18P	43.18	45.72
SCT2541WV-19P	45.72	48.26
SCT2541WV-20P	48.26	50.80

REV	DATE	MODIFICATION DESCRIPTION	CHANGE	APPROVE
0	05/12/27	NEW		

OPERATION	
~ 10	±0.15
20 ~ 30	±0.30
30 ~	±0.50
Angle	± 2°
DIM	TOL

DRAW	CHENA	05/12/28
DESIGN		
CHECK	MICKY	05/12/28
APPROVE	HELLEN	05/12/28

SCALE	
UNIT	mm
SIZE	A4
SHEET	1/1
PROJ.	

SCONDAR 森康达电子有限公司
SCONDAR ELECTRONIC LIMITED

PART NO.	SCT2541WV-XXP
TITLE:	MX2.54 180C Wafer
DRAWING NO.	SCT2541