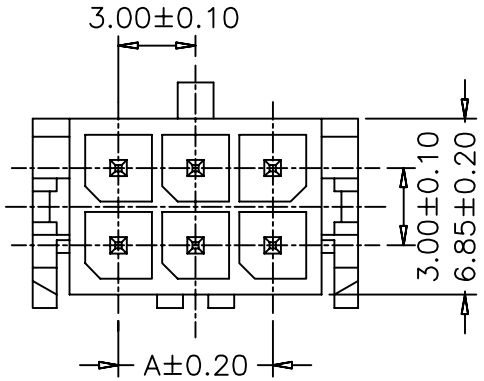

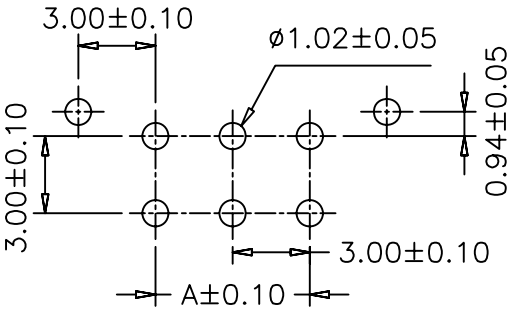

P.C.B LAYOUT

SPECIFICATIONS
Voltage Rating: 250V AC/DC
Current Rating: 5A AC/DC
Withstanding Voltage: 1500V AC/minute
Insulation Resistance: 1000MΩ min.
Temperature Range: -25° C - +85° C
Contact Resistance: 20mΩ max

WAFER
Part No: SCT3001WV-2xXXP
Poles: 2-12
Material: Nylon 66, UL94V-0
Pin: Brass, Tin plated

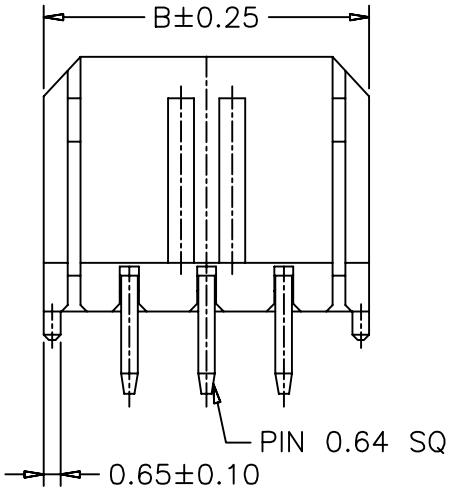

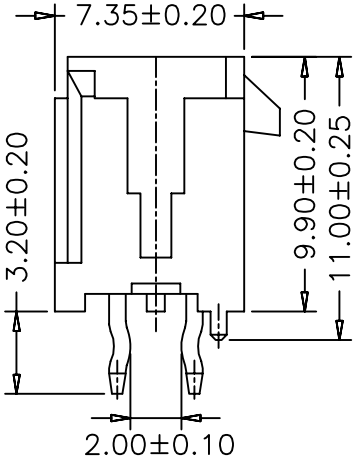

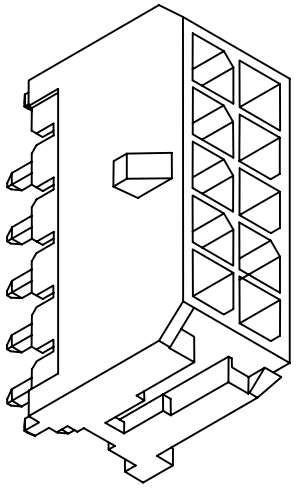

PART NO.	Dimensions	
	A	B
SCT3001WV-2X1P	---	6.65
SCT3001WV-2X2P	3.00	9.65
SCT3001WV-2X3P	6.00	12.65
SCT3001WV-2X4P	9.00	15.65
SCT3001WV-2X5P	12.00	18.65
SCT3001WV-2X6P	15.00	21.65
SCT3001WV-2X7P	18.00	24.65
SCT3001WV-2X8P	21.00	27.65
SCT3001WV-2X9P	24.00	30.65
SCT3001WV-2X10P	27.00	33.65
SCT3001WV-2X11P	30.00	36.65
SCT3001WV-2X12P	33.00	39.65

REV	DATE	MODIFICATION DESCRIPTION	CHANGE	APPROVE
0	05/12/27	NEW		

OPERATION	
~ 10	±0.15
20 ~ 30	±0.30
30 ~	±0.50
Angle	± 2°
DIM	TOL

DRAW	JUDY	2007.05.09
DESIGN		
CHECK	MICKY	2007.05.09
APPROVE	HELLEN	2007.05.09

SCALE	
UNIT	mm
SIZE	A4
SHEET	1/1
PROJ.	

SCONDAR 森康达电子有限公司 SCONDAR ELECTRONIC LIMITED

PART NO.	SCT3001WV-2xXXP
TITLE:	MOLEX3.0 180C WAFER
DRAWING NO.	SCT3001