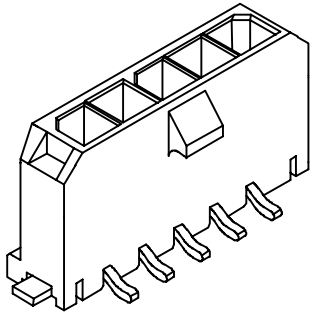

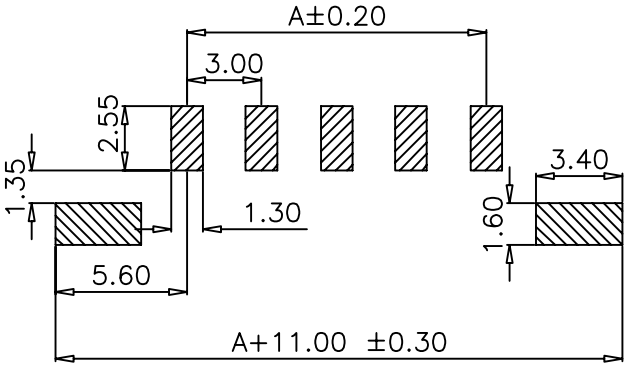

PCB LAYOUT

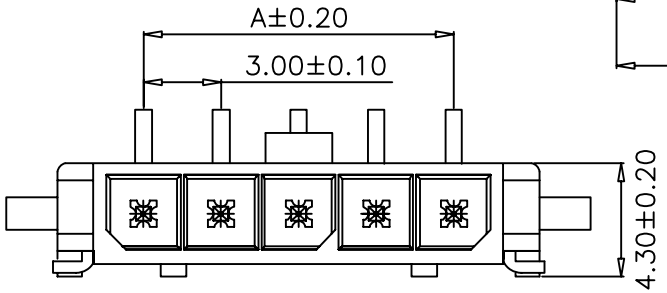

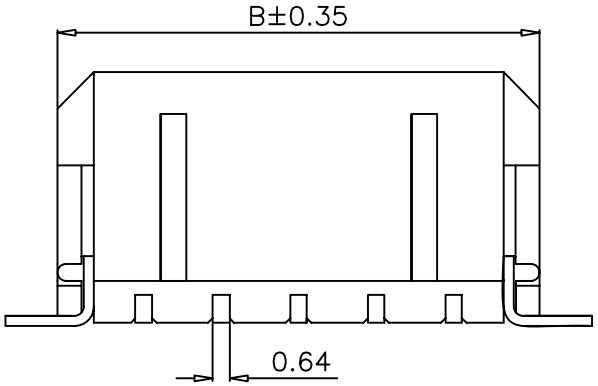

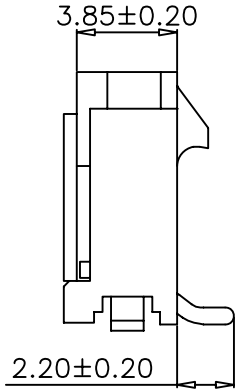

SPECIFICATIONS
Voltage Rating: 250V AC/DC
Current Rating: 5A AC/DC
Withstanding Voltage: 1500V AC/minute
Insulation Resistance: 1000MΩ min.
Temperature Range: -25° C - +85° C
Contact Resistance: 20mΩ max

WAFER
Part No: SCT3001WV-S-XXP
Poles: 2-12
Material: Nylon 66, UL94V-0
Pin: Brass, Tin plated

PART NO.	Dimensions	
	A	B
SCT3001WV-S-2P	3.00	9.65
SCT3001WV-S-3P	6.00	12.65
SCT3001WV-S-4P	9.00	15.65
SCT3001WV-S-5P	12.00	18.65
SCT3001WV-S-6P	15.00	21.65
SCT3001WV-S-7P	18.00	24.65
SCT3001WV-S-8P	21.00	27.65
SCT3001WV-S-9P	24.00	30.65
SCT3001WV-S-10P	27.00	33.65
SCT3001WV-S-11P	30.00	36.65
SCT3001WV-S-12P	33.00	39.65

REV	DATE	MODIFICATION DESCRIPTION	CHANGE	APPROVE
0	05/12/27	NEW		

OPERATION			
DRAW	JUDY	2007.05.09	
DESIGN			
CHECK	MICKY	2007.05.09	
APPROVE	HELLEN	2007.05.09	

DIM	TOL
~ 10	±0.25
20 ~ 30	±0.30
30 ~	±0.50
Angle	± 2°

SCALE	6:1
UNIT	mm
SIZE	A4
SHEET	1/1
PROJ.	

SCONDAR 森康达电子有限公司 SCONDAR ELECTRONIC LIMITED

PART NO.	SCT3001WV-S-XXP
TITLE:	MOLEX3.0 180C SMT WAFER
DRAWING NO.	SCT3001