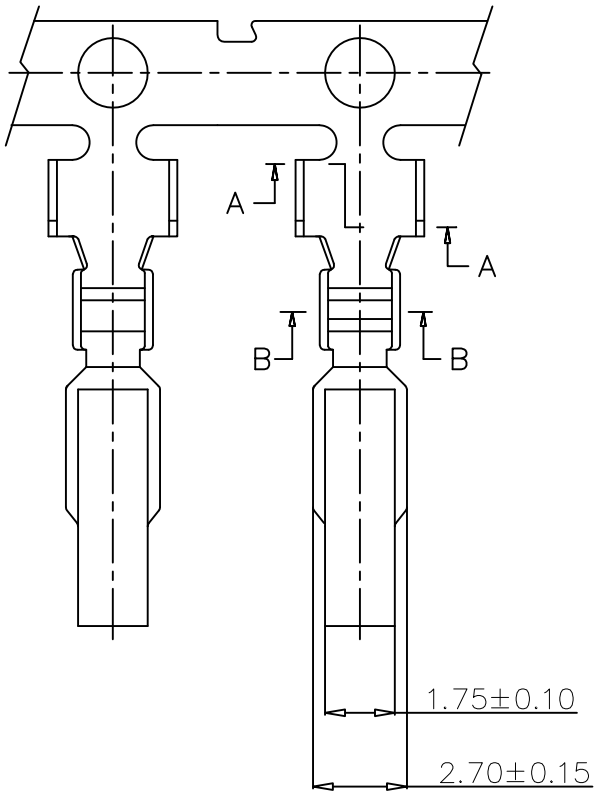

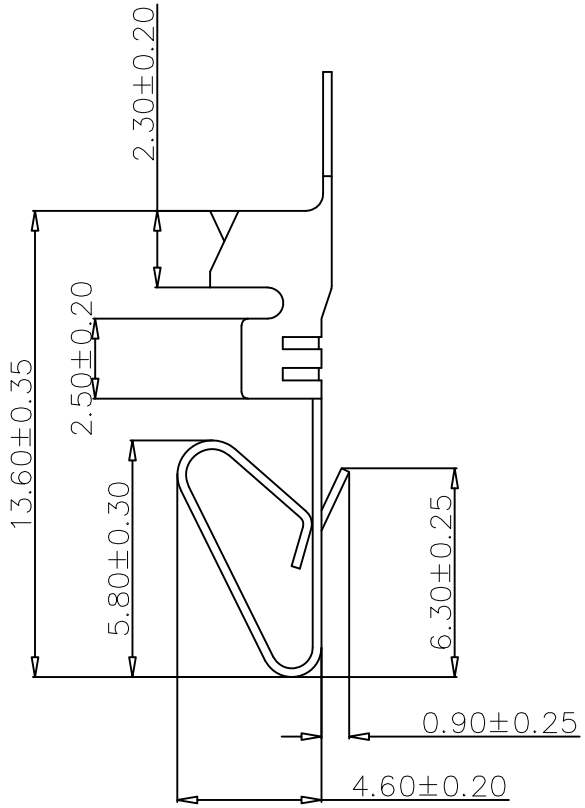

SPECIFICATIONS
Voltage Rating: 250V AC/DC
Current Rating: 7A AC/DC
Withstanding Voltage: 1500V AC/minute
Insulation Resistance: 1000MΩ min.
Temperature Range: -25° C - +85° C
Contact Resistance: 20mΩ max

TERMINAL
Part No: SCT3960T
Wire Range: AWG#18-#24 (OD2.8mm max)
Material: Brass
Finish: Tin Plated
Thickness: 0.25mm
Q'TY: 5,000PCS/Reel

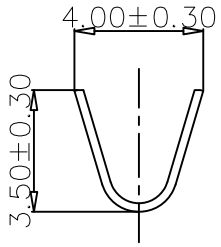

A-A

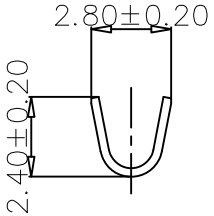

B-B

REV	DATE	MODIFICATION DESCRIPTION	CHANGE	APPROVE
0	05/12/27	NEW	———	———

OPERATION				
DRAW	CHENA	2005.03.13	~ 10	±0.15
DESIGN			20 ~ 30	±0.30
CHECK	MICKY	2005.03.13	30 ~	±0.50
APPROVE	HELLEN	2005.03.13	Angle	± 2°
			DIM	TOL

SCALE	
UNIT	mm
SIZE	A4
SHEET	1/1
PROJ.	

SCONDAR 森康达电子有限公司
SCONDAR ELECTRONIC LIMITED

PART NO.	SCT3960T
TITLE:	MOLEX3.96 TERMINAL
DRAWING NO.	SCT3960