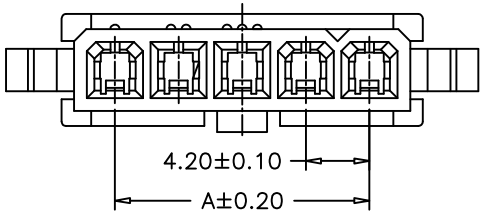

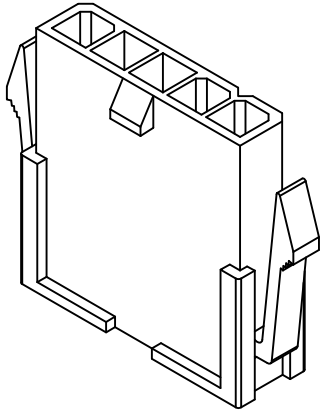

SPECIFICATIONS
Voltage Rating: 600V AC/DC
Current Rating: 9A AC/DC
Withstanding Voltage: 1500V AC/minute
Insulation Resistance: 1000MΩ min.
Temperature Range: -25° C - +85° C
Contact Resistance: 20mΩ max

HOUSING
Part No: SCT4201FH-XXP
Pole: 2-06
Material: Nylon 66, UL94V-2

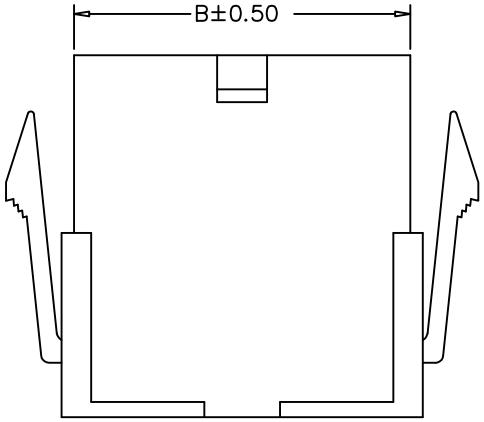

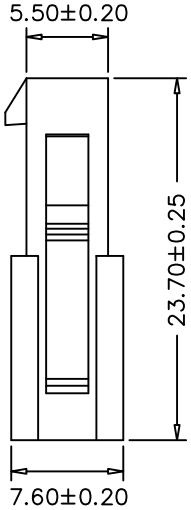

PART NO.	Dimensions	
	A	B
SCT4201FH- 02P	4.20	9.60
SCT4201FH- 03P	8.40	13.80
SCT4201FH- 04P	12.60	18.00
SCT4201FH- 05P	16.80	22.20
SCT4201FH- 06P	21.00	26.40

REV	DATE	MODIFICATION DESCRIPTION	CHANGE	APPROVE
0	05/12/27	NEW	———	———

OPERATION	
~ 10	±0.15
20 ~ 30	±0.30
30 ~	±0.50
Angle	± 2°
DIM	TOL

DRAW	YANG	2016.10.27
DESIGN		
CHECK	MICKY	2016.10.27
APPROVE	ALLEN	2016.10.27

SCALE	
UNIT	mm
SIZE	A4
SHEET	1/1
PROJ.	

SCONDAR 森康达电子有限公司
SCONDAR ELECTRONIC LIMITED

PART NO.	SCT4201FH-XXP
TITLE:	MOLEX4.2 FEMALE HOUSING
DRAWING NO.	SCT4201