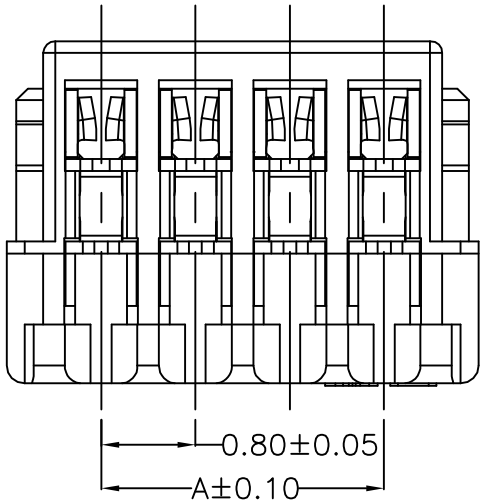

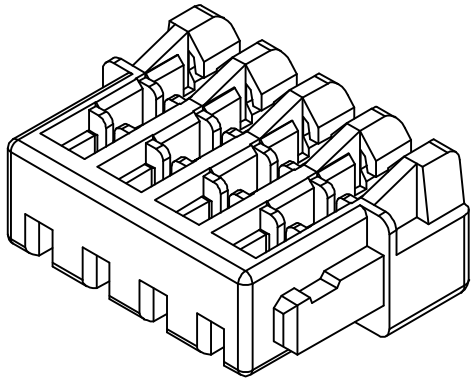

SPECIFICATIONS

Current Rating: 0.5A AC,DC
Voltage Rating: 30V AC,DC
Temperature Range: −25°C ~ +85°C
Contact Resistance: 20mΩ Max.
Insulation Resistance: 100M Min.
Withstanding Voltage: 200V AC/minute
Contacts: Phosphor Bronze/Tin−plated
Material: Nylon 46,UL94V−0
Color: Natural(Beige)
Applicable Wire: AWG#32
Insulation O.D.: 0.38mm

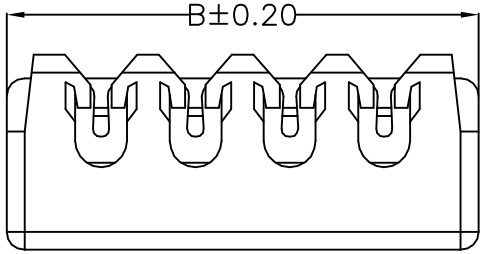

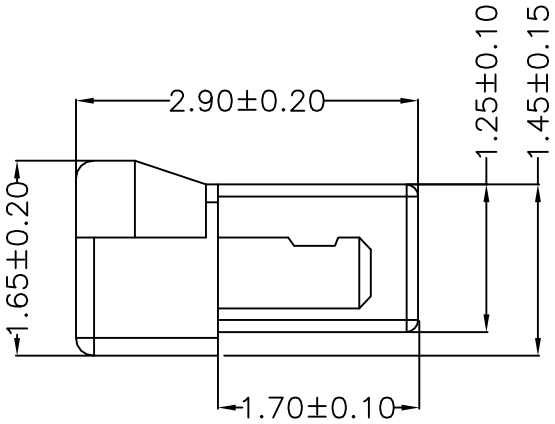

PART NO.	Dimensions	
	A	B
SCT0800HI−02P	0.80	2.40
SCT0800HI−04P	2.40	4.00
SCT0800HI−08P	5.60	7.20
SCT0800HI−10P	7.20	8.80
SCT0800HI−12P	8.80	10.40
SCT0800HI−14P	10.40	12.00
SCT0800HI−15P	11.20	12.80
SCT0800HI−16P	12.00	13.60
SCT0800HI−17P	12.80	14.40
SCT0800HI−20P	15.20	16.80

REV	DATE	MODIFICATION DESCRIPTION	CHANGE	APPROVE
0	05/12/27	NEW	———	———

OPERATION	
~ 10	±0.15
20 ~ 30	±0.30
30 ~	±0.50
Angle	± 2°
DIM	TOL

DRAW	Micky.Liu	2006/05/02
DESIGN		
CHECK	Judy.Huang	2006/05/02
APPROVE	Hellen.Li	2006/05/02

SCALE	
UNIT	mm
SIZE	A4
SHEET	1/1
PROJ.	

SCONDAR 森康达电子有限公司
S'CONDAR ELECTRONIC LIMITED

PART NO.	SCT0800HI−XXP
TITLE:	0.8 IDC HOUSING
DRAWING NO.	SCT0800